ENGINE POWERED FORKLIFT

8FG/8FD 1.0 to 3.5 ton

TOYOTA 8 SERIES

Features and equipment may vary depending on market.

Outstanding Comfort and Visibility

Outstanding Visibility

The overhead guard, mast and instrument panel have been designed to provide excellent visibility of the fork tips at the most frequently used lift heights.

Easy Entry and Exit

A large assist grip, A deep, wide step and a spacious opening team up for easy entry onto the forklift.

Large Assist Grip

Roomy Foot Space

Comfort and Support ORS* Seat

*ORS: Operator Restraint System

Top-Class Stability

SAS + OPS

System of Active Stability — Operator Presence Sensing

System of Active Stability SAS

The Active Control Rear Stabilizer realizes forklift stability during turns. This system includes such functions as the Mast Function Controller and Steering Synchronizer.

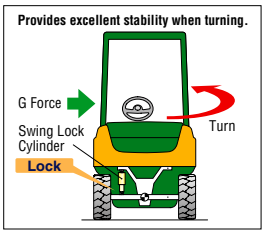

Travel and Load-Handling Control OPT

This includes idle-control to maintain lifting performance and one-button control to lower maximum speed. Powershift models also control travel speed based on load weight and lift height.

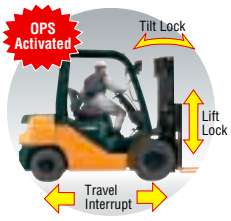

Operator Presence Sensing System OPS

The OPS system will terminate load-handling and powered travel functions if it senses that the operator is not in the proper operating position.

Efficiency-Boosting Operability

Operator-Friendly Steering Wheel

The small-diameter steering wheel helps easy operation.

Multifunction Display OPT

The Mulifunctional Display offers useful information for operation.

Combination Meter

Necessary instrumentation, such as the fuel meter, water temperature indicator and hour meters are shown in an easy-to-monitor digital format.

Environmental Friendliness

Low-noise operation and environmentally friendly components help to create comfortable workplace.

Low-Noise Design

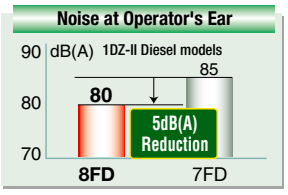

Serviceability

Extended engine hood opening provides easy access for inspections and servicing.

TOYOTA

MODEL VARIATION

1 Ton Series

2 Ton Series

3 Ton Series

MAIN SPECIFICATIONS

Model			8FG10 8FD10	8FG15 8FD15	8FG18* 8FD18*	8FGK20* 8FDK20*	8FG20 8FD20	8FGK25* 8FDK25*	8FG25 8FD25	8FGK30* 8FDK30*	8FG30 8FD30	8FGJ35 8FDJ35
Engine Model			4Y 1DZ-II	4Y 1DZ-II	4Y 1DZ-II	4Y 1DZ-II	4Y 1DZ-II,2Z	4Y 1DZ-II	4Y 1DZ-II,2Z	4Y 1DZ-II	4Y 1DZ-II,2Z	4Y 2Z
Load Capacity		kg	1,000	1,500	1,750	2,000	2,000	2,500	2,500	3,000	3,000	3,500
Load Center		mm	500	500	500	500	500	500	500	500	500	500
Overall Width	A	mm	1,045	1,070	1,070	1,155	1,150	1,155	1,150	1,255	1,240	1,290
Turning Radius(outside)	B	mm	1,910	1,990	2,010	2,040	2,200	2,090	2,280	2,130	2,430	2,490
Overhead Guard Height	C	mm	2,080	2,080	2,080	2,085	2,110	2,085	2,110	2,085	2,170	2,180
Length to Fork Face	D	mm	2,240	2,290	2,310	2,380	2,560	2,445	2,635	2,520	2,795	2,865

NOTE: *Powershift models

ENGINE SPECIFICATIONS

Model		TOYOTA 4Y Gasoline
Piston Displacement	cc	2,237
Rated Horsepower/r.p.m.	kW	40/2,400 (43/2,600)
Rated Torque/r.p.m.	N-m	161/1,800

NOTE: ( ) for 30(32)-8FG30.8FGJ35

Model		TOYOTA 1DZ-II Diesel	TOYOTA 2Z Diesel
Piston Displacement	cc	2,486	3,469
Rated Horsepower/r.p.m.	kW	40/2,400 [44/2,600]	49/2,200
Rated Torque/r.p.m.	N-m	166/1,600	215/1,600

NOTE: [ ] for 60(62)-8FD20.25.30

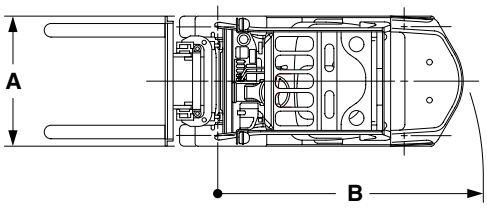

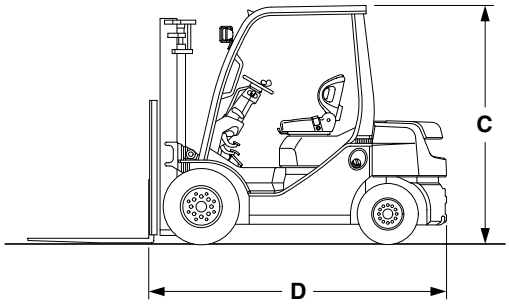

OPS does not operate the brakes. Always set the parking brake before leaving the forklift. Travel OPS is not available on manual transmission models.
The data in this leaflet was determined based on our standard testing condition. The performance may vary depending on the actual specification and condition of the vehicle as well as the condition of the operating area.
Availability and specifications are determined regionally and are subject to change without notice.
Due to photography and printing, color of the actual vehicle may vary from this leaflet.

This leaflet is printed on recycled paper with soy ink.

TOYOTA INDUSTRIAL EQUIPMENT

TOYOTA Material Handling Company
A Division of TOYOTA INDUSTRIES CORPORATION

LF.8FG/8FD10-35/(Only Australia)0609/Ⓢ/Printed in Japan/**No.711240E0/20,500**